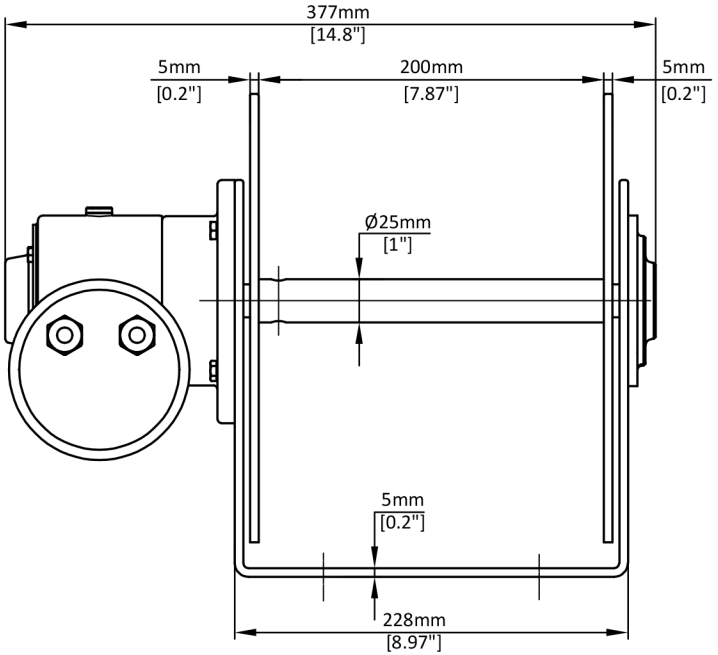
377mm
[14.8"]
5mm
[0.2"]
200mm
[7.87"]
5mm
[0.2"]
Ø25mm
[1"]
5mm
[0.2"]
228mm
[8.97"]

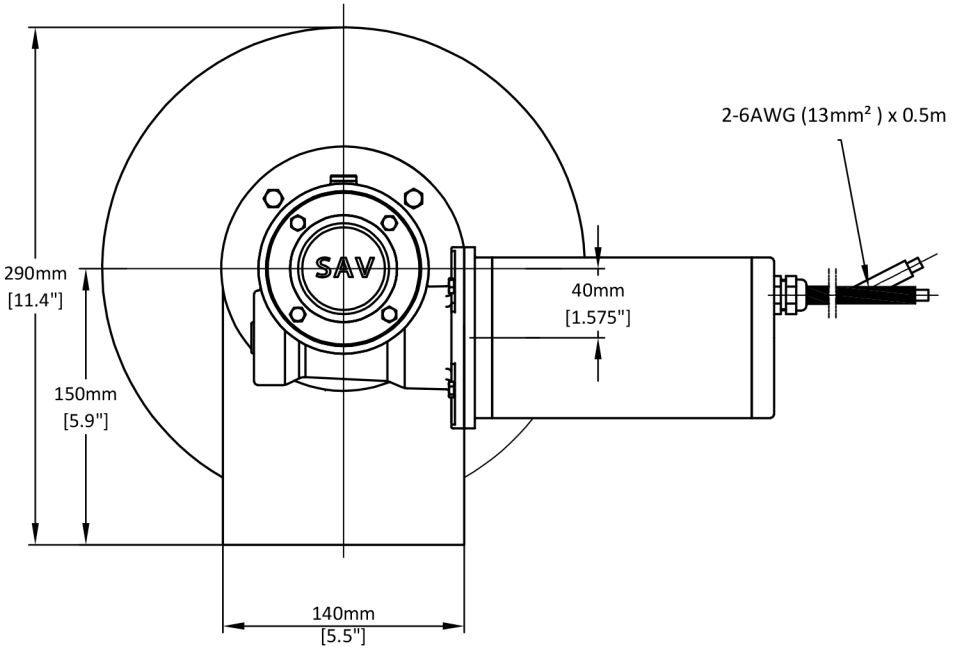
2-6AWG (13mm²) x 0.5m
290mm
[11.4"]
SAV
40mm
[1.575"]
150mm
[5.9"]
140mm
[5.5"]

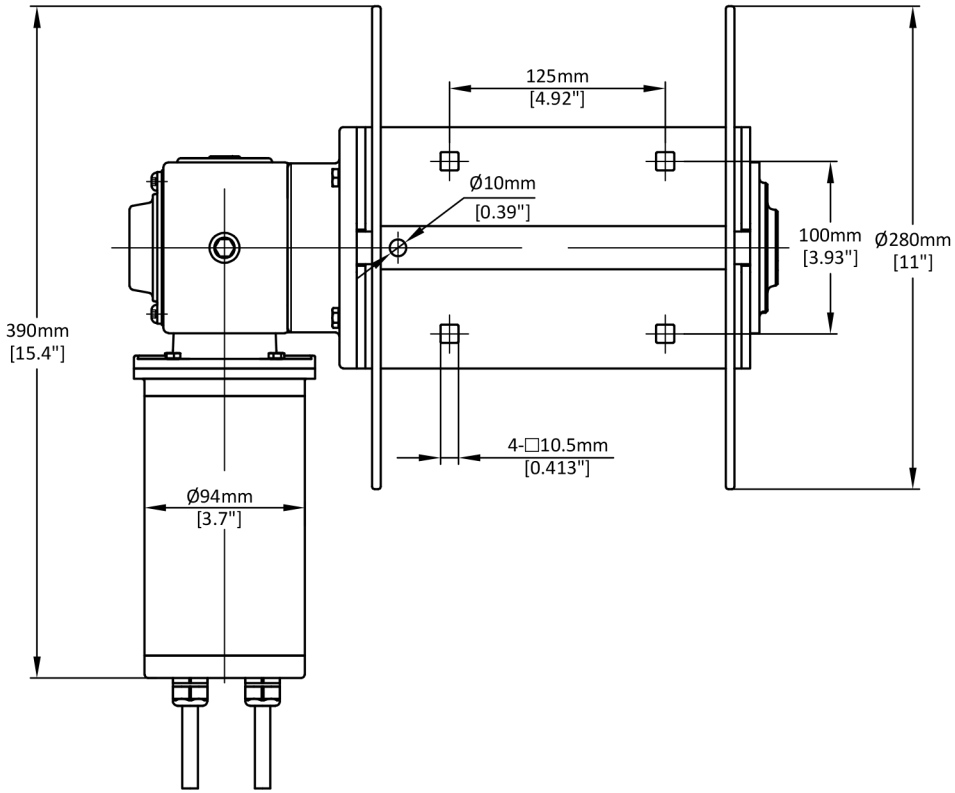
125mm
[4.92"]
Ø10mm
[0.39"]
100mm
[3.93"]
Ø280mm
[11"]
390mm
[15.4"]
4-□10.5mm
[0.413"]
Ø94mm
[3.7"]