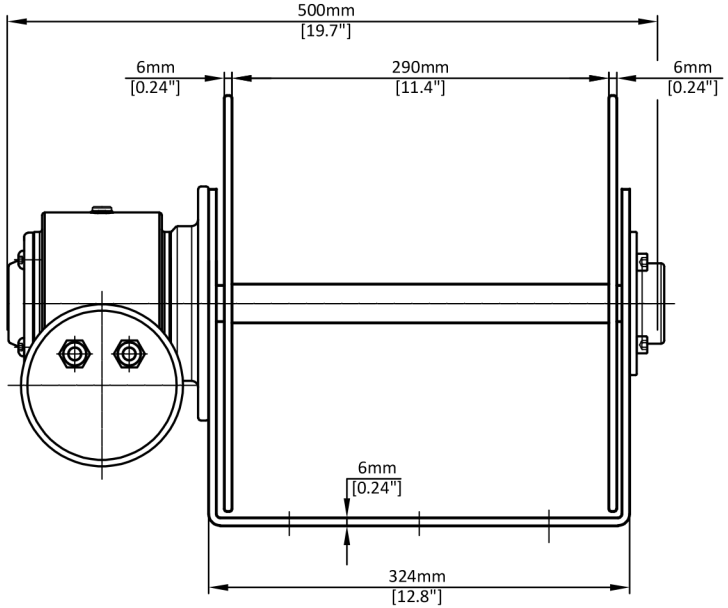
500mm
[19.7"]
6mm
[0.24"]
290mm
[11.4"]
6mm
[0.24"]
6mm
[0.24"]
324mm
[12.8"]

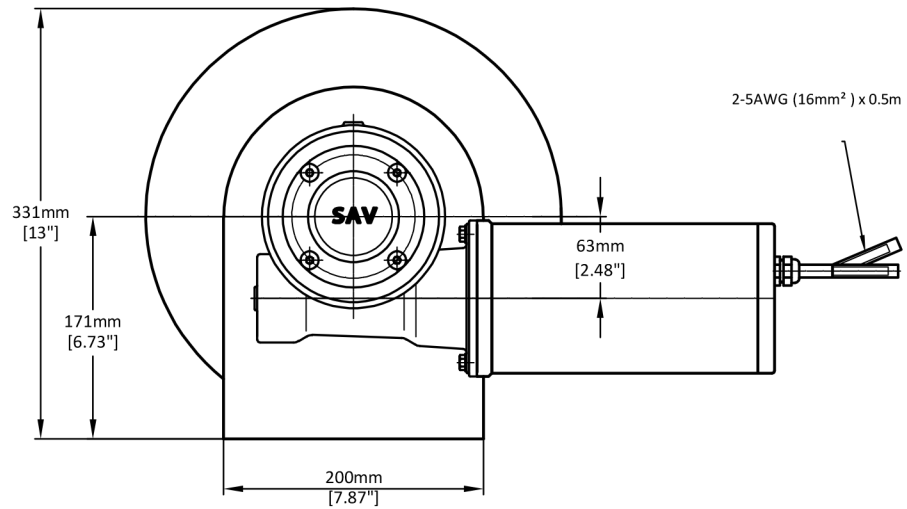
2-5AWG (16mm²) x 0.5m
SAV
331mm
[13"]
171mm
[6.73"]
63mm
[2.48"]
200mm
[7.87"]

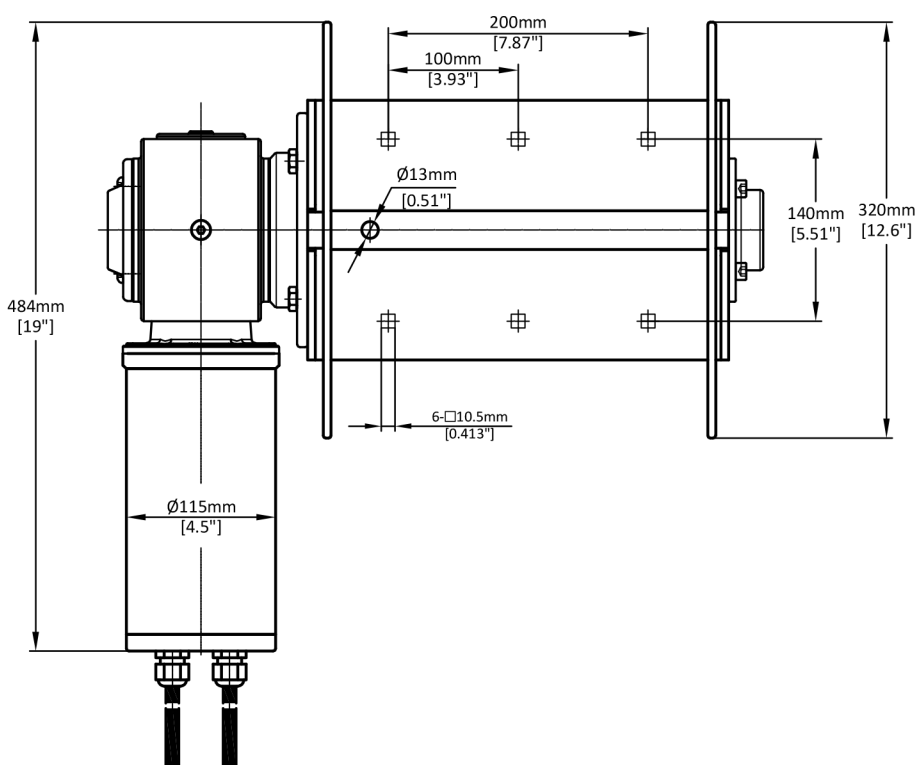
200mm
[7.87"]
100mm
[3.93"]
Ø13mm
[0.51"]
140mm
[5.51"]
320mm
[12.6"]
484mm
[19"]
6-□10.5mm
[0.413"]
Ø115mm
[4.5"]