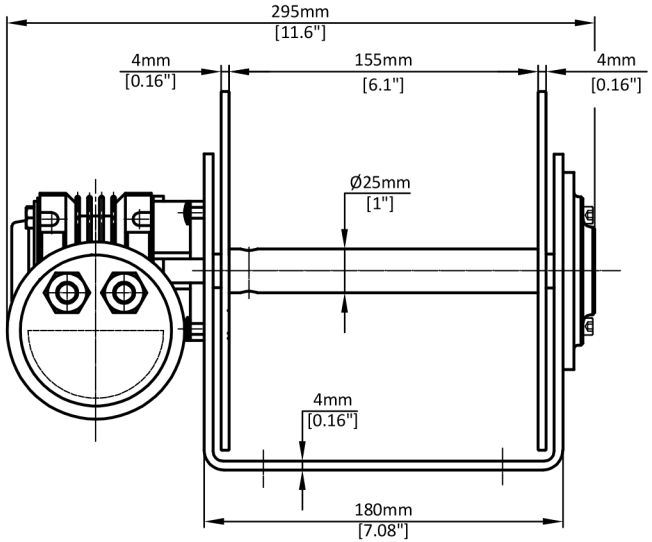
295mm
[11.6"]
4mm
[0.16"]
155mm
[6.1"]
4mm
[0.16"]
Ø25mm
[1"]
4mm
[0.16"]
180mm
[7.08"]

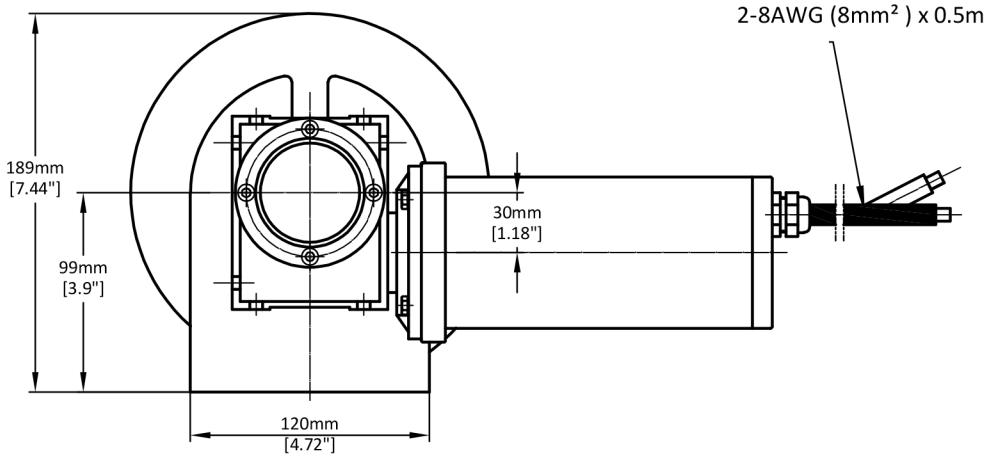
2-8AWG (8mm²) x 0.5m
189mm
[7.44"]
99mm
[3.9"]
30mm
[1.18"]
120mm
[4.72"]

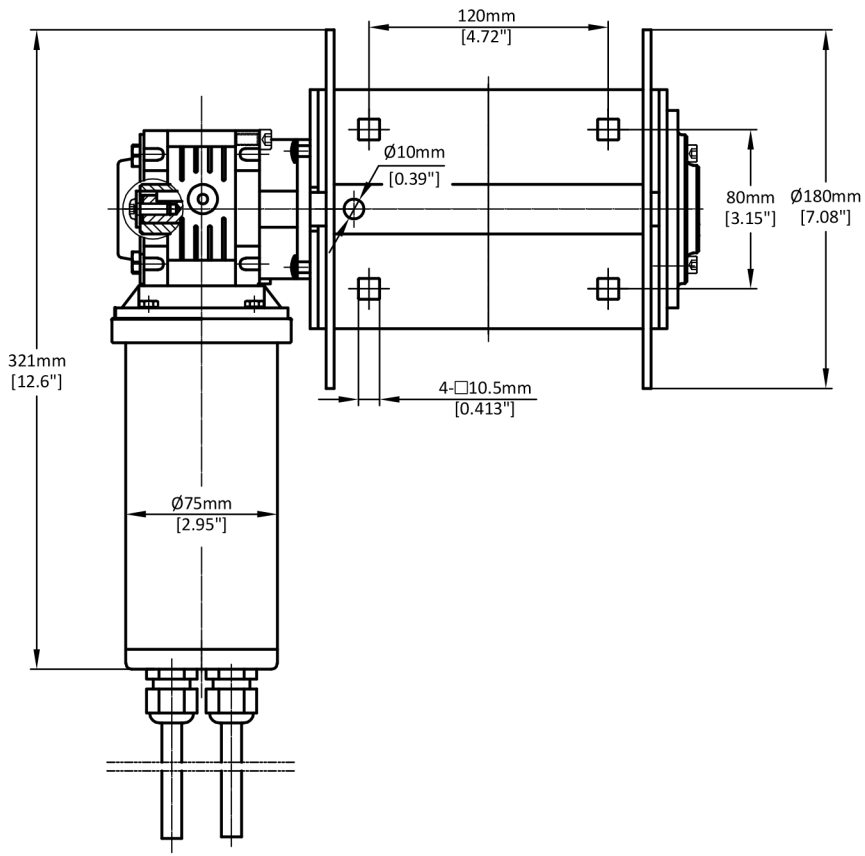
120mm
[4.72"]
Ø10mm
[0.39"]
80mm
[3.15"]
Ø180mm
[7.08"]
321mm
[12.6"]
4-□10.5mm
[0.413"]
Ø75mm
[2.95"]