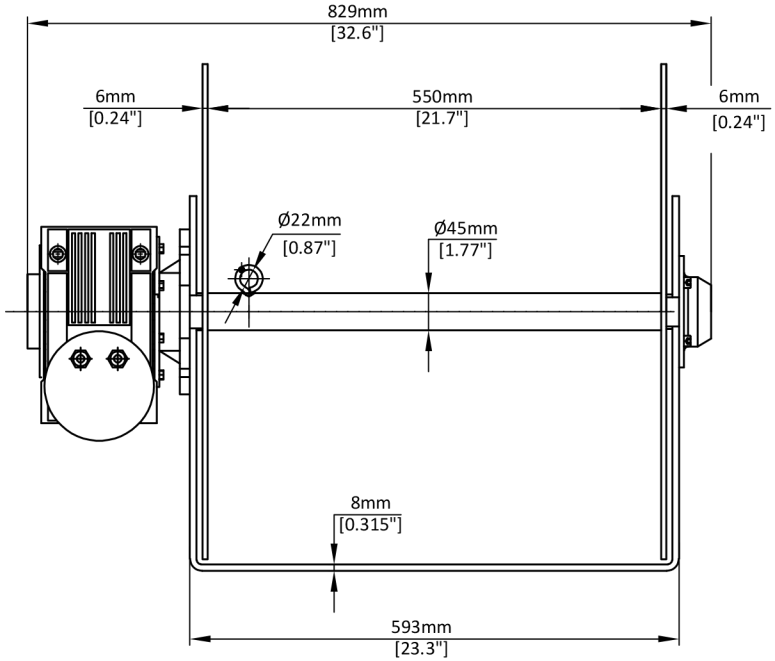
829mm
[32.6"]
6mm
[0.24"]
550mm
[21.7"]
6mm
[0.24"]
Ø22mm
[0.87"]
Ø45mm
[1.77"]
8mm
[0.315"]
593mm
[23.3"]

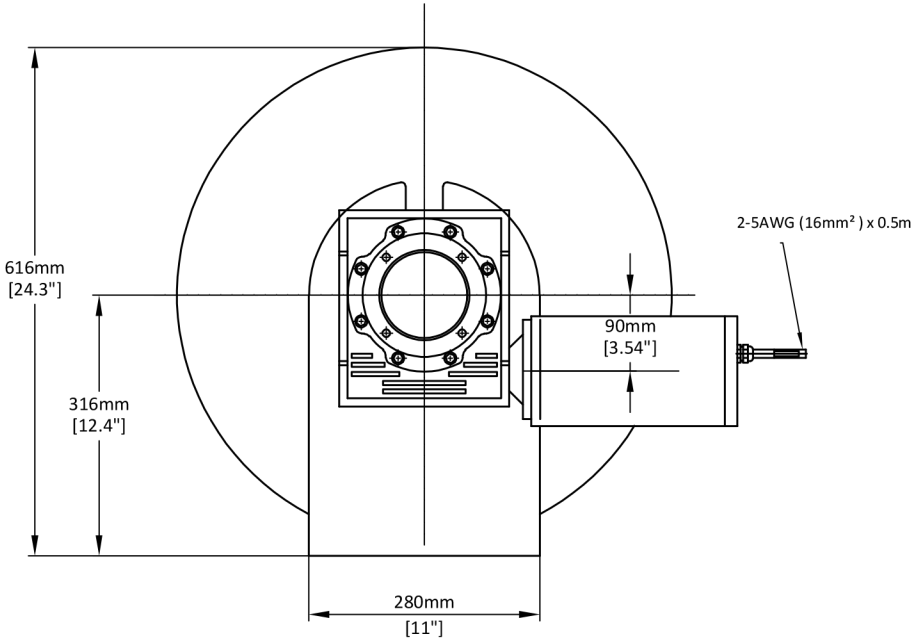
616mm
[24.3"]
316mm
[12.4"]
2-5AWG (16mm²) x 0.5m
90mm
[3.54"]
280mm
[11"]

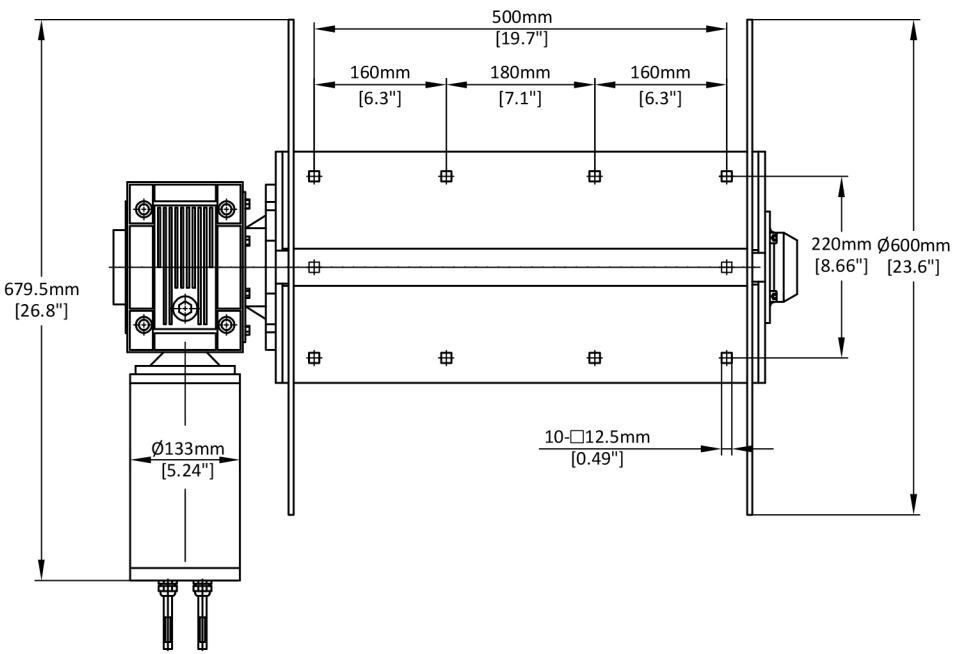
500mm
[19.7"]
160mm
[6.3"]
180mm
[7.1"]
160mm
[6.3"]
679.5mm
[26.8"]
220mm
[8.66"]
Ø600mm
[23.6"]
Ø133mm
[5.24"]
10-□12.5mm
[0.49"]