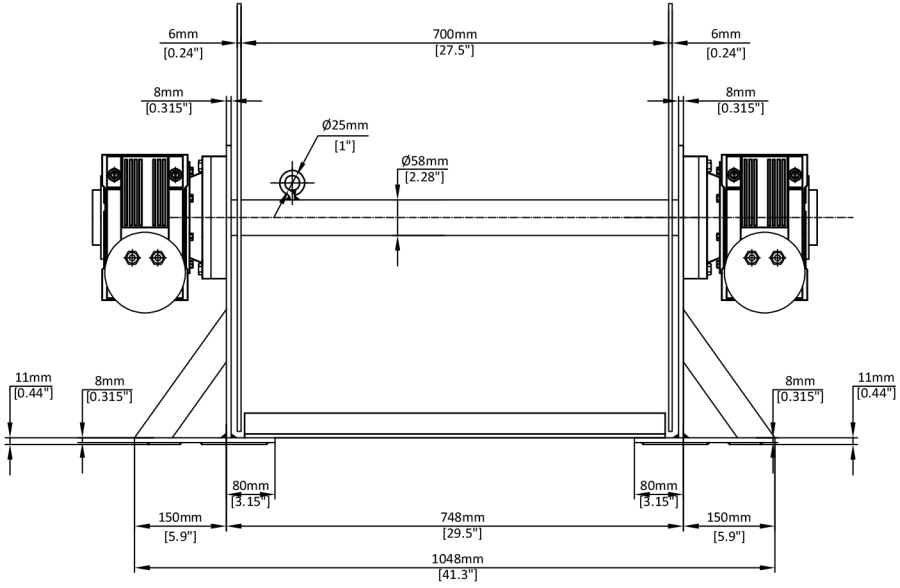
6mm
[0.24"]
700mm
[27.5"]
6mm
[0.24"]
8mm
[0.315"]
8mm
[0.315"]
Ø25mm
[1"]
Ø58mm
[2.28"]
11mm
[0.44"]
8mm
[0.315"]
8mm
[0.315"]
11mm
[0.44"]
80mm
[3.15"]
80mm
[3.15"]
150mm
[5.9"]
748mm
[29.5"]
150mm
[5.9"]
1048mm
[41.3"]

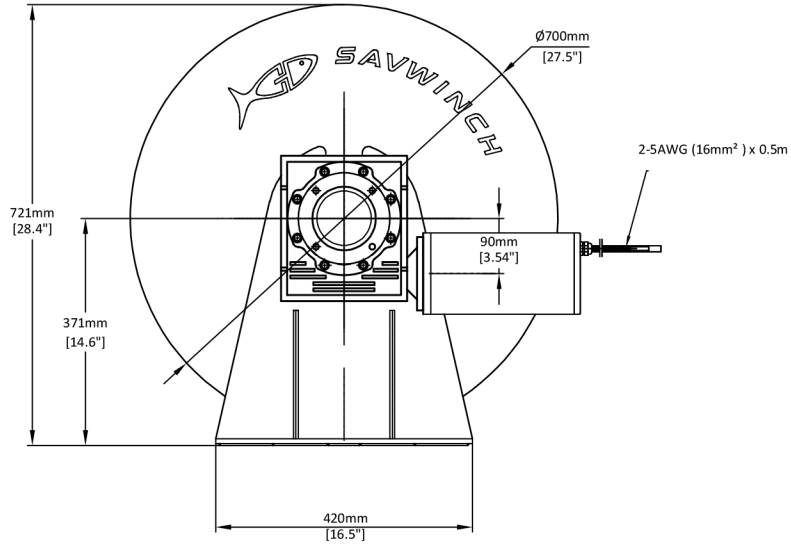
Ø700mm
[27.5"]
SAVWINCH
2-5AWG (16mm²) x 0.5m
721mm
[28.4"]
90mm
[3.54"]
371mm
[14.6"]
420mm
[16.5"]

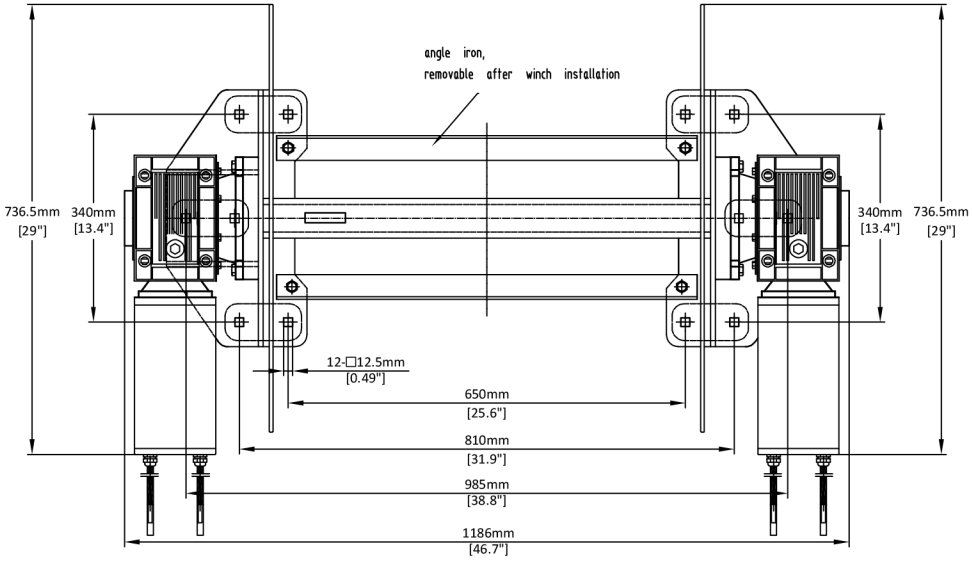
angle iron,
removable after winch installation
736.5mm
[29"]
340mm
[13.4"]
340mm
[13.4"]
736.5mm
[29"]
12-□12.5mm
[0.49"]
650mm
[25.6"]
810mm
[31.9"]
985mm
[38.8"]
1186mm
[46.7"]