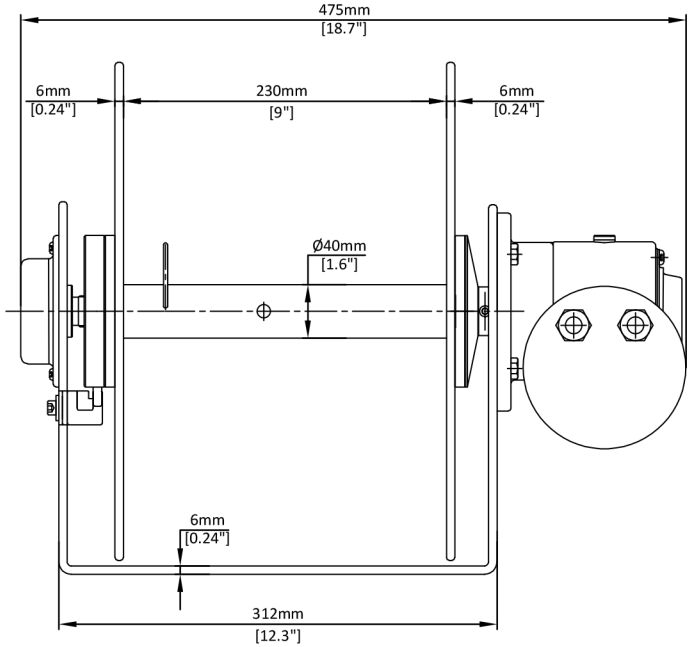

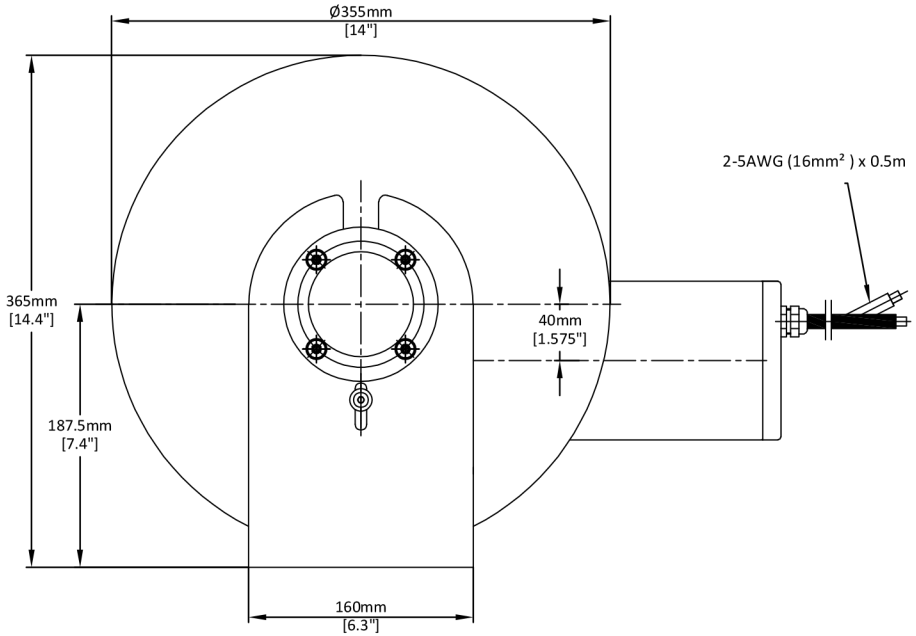

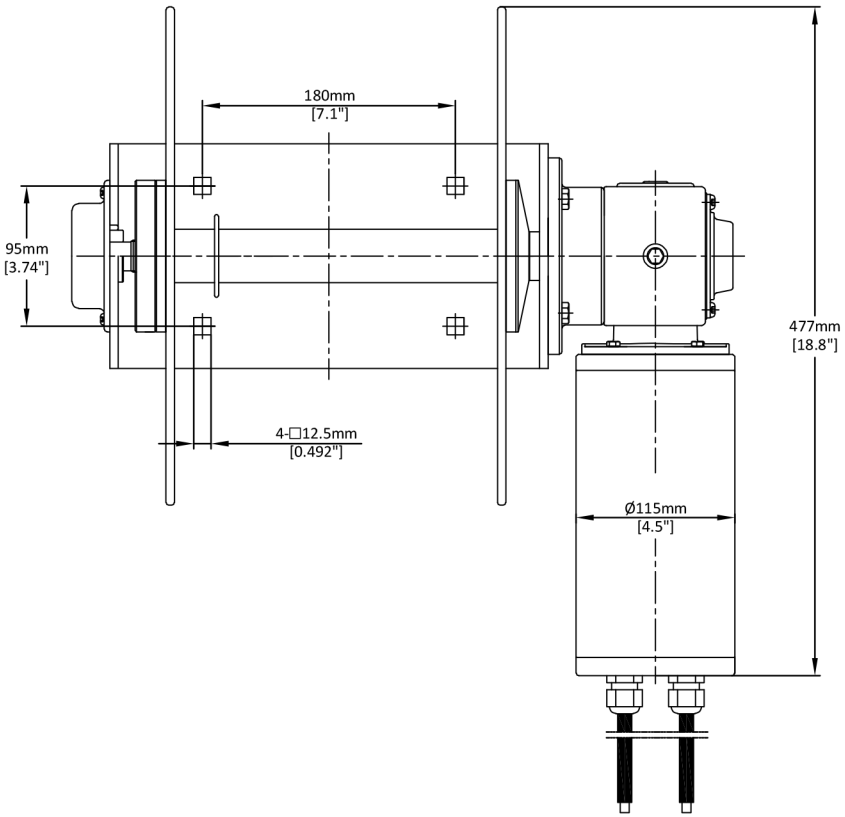
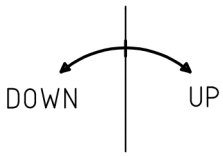
View it from the non-driving end